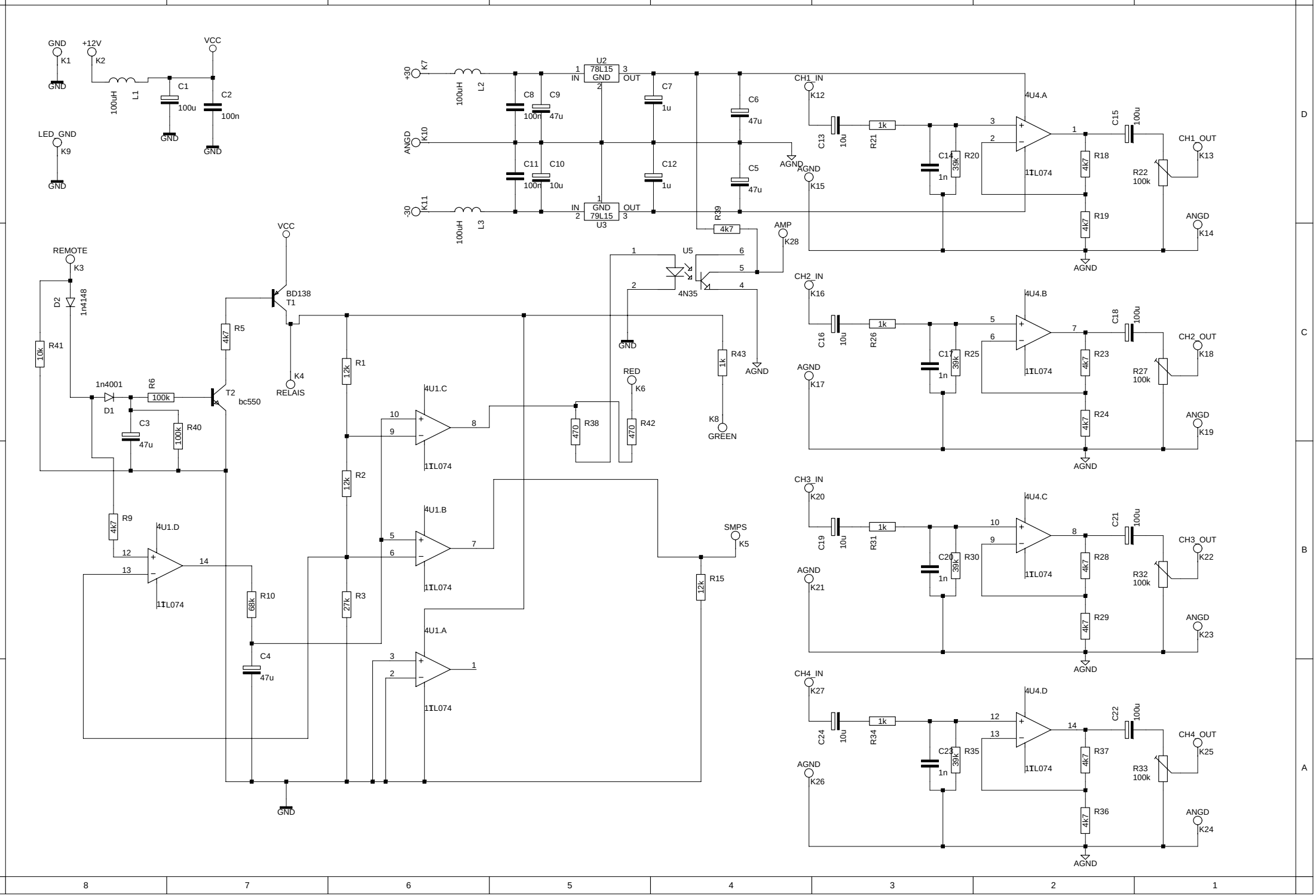
GND
K1
+12V
K2
VCC
100uH
L1
C1
100u
C2
100n
LED_GND
K9
+30
K7
100uH
L2
C8
100n
C9
47u
U2
78L15
IN
GND
OUT
C7
1u
C6
47u
CH1_IN
K12
4U4.A
C15
100u
CH1_OUT
K13
AGND
K10
C11
100n
C10
10u
C12
1u
C5
47u
AGND
K15
C13
10u
R21
1k
C14
1n
39k
R20
TL074
R18
4k7
R22
100k
-30
K11
100uH
L3
GND
79L15
U3
R39
4k7
AMP
K28
R19
4k7
ANGD
K14
REMOTE
K3
D2
1n4148
R41
10k
VCC
BD138
T1
R5
4k7
U5
4N35
CH2_IN
K16
4U4.B
C18
100u
CH2_OUT
K18
C16
10u
R26
1k
C17
1n
39k
R25
R23
4k7
R27
100k
AGND
K17
R24
4k7
ANGD
K19
1n4001
D1
R6
100k
T2
bc550
K4
RELAIS
C3
47u
R40
100k
R1
12k
R2
12k
R3
27k
4U1.C
4U1.B
4U1.A
4U1.D
TL074
R38
470
R42
470
RED
K6
R43
1k
K8
GREEN
R9
4k7
R10
68k
C4
47u
SMPS
K5
R15
12k
CH3_IN
K20
4U4.C
C21
100u
CH3_OUT
K22
C19
10u
R31
1k
C20
1n
39k
R30
R28
4k7
R32
100k
AGND
K21
R29
4k7
ANGD
K23
CH4_IN
K27
4U4.D
C22
100u
CH4_OUT
K25
C24
10u
R34
1k
C23
1n
39k
R35
R37
4k7
R33
100k
AGND
K26
R36
4k7
ANGD
K24